ST1 Silo Weighing System

FEATURES

- Appropriate for panel mounting
- LCD screen
- Language Interface available in English and French
- Voltage rating: 24 VDC/160 mA
- Up to 4 measurements per screen
- Up to 8 silo weight measurements and 16 temperature measurements
- Up to 8 deported casings and deported temperature casings
- Recommended load cell for weighing measurements: 178 extensometer

OPTIONAL

- Modbus TCP & Ethernet IP connections available
- Up to 4 relay interface casings (16 relay outputs per casing)
- Up to 16 temperature control sensors (PT100)

APPLICATIONS

- Cement plant – aggregates storage tank
- Water treatment plant – storage/ batching tank
- Agriculture (weighing measurements only) – grain vessel
- F&B industry (weighing measurements only) – dairy storage plant, brewery, filling machine

DESCRIPTION

Our modern and intuitive system can provide low uncertainty and highly repeatable weighing and temperature measurements. For our ST1 system, it can display both weight and temperature measurements of connected silos. Up to 8 silos can be supported with an option of up to a total of 16 PT100 Temperature Sensors, up to 4 relay interface casings and a Modbus TCP/ Ethernet IP connection.

CONFIGURATION

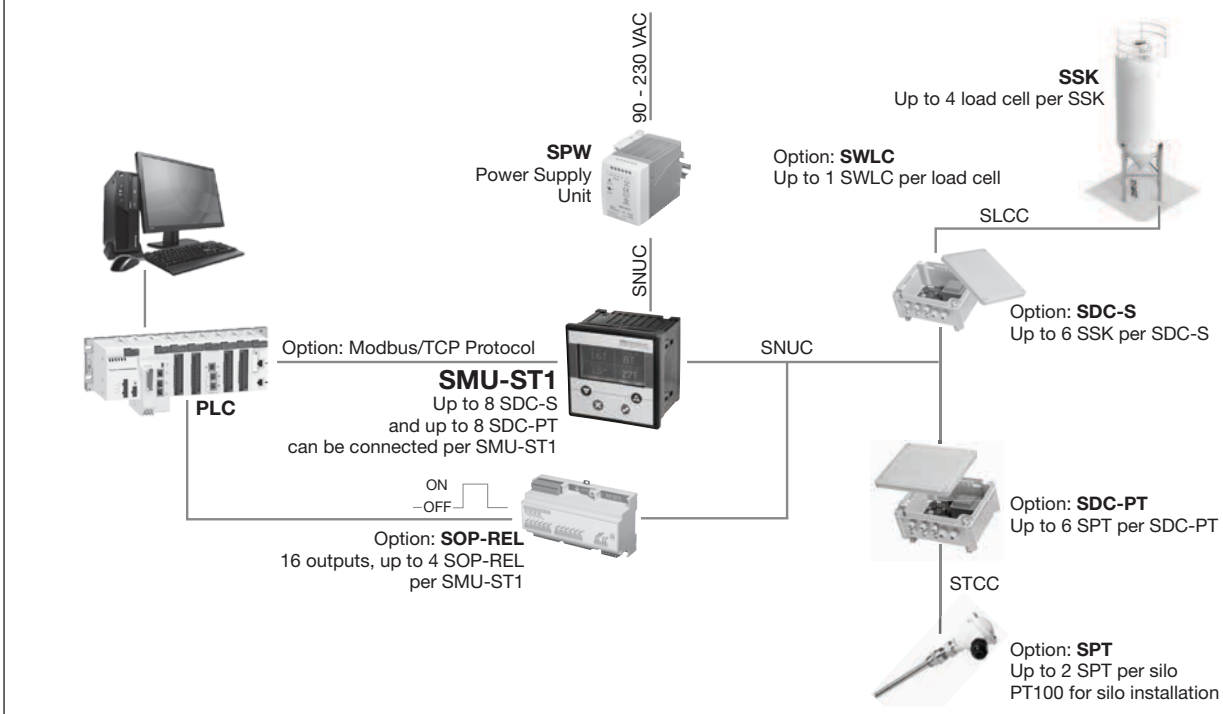

ST1 Silo Weighing System

SPECIFICATIONS

ST1 CONTROLLER (SMU-ST1)

Performance

Silo Weight Measurement Up to 8
Temperature Measurement Up to 16
Microcontroller Microchip PIC16
Data Storage 266KB

Environmental

Operating Temperature 0 to +50°C (32 to 122°F)
Storage Temperature -20 to +70°C (-4 to 158°F)
Maximum Humidity Before Condensation 90%

Display and Keyboard

Display Graphic LCD
Display Dimensions 128 x 64 pixels
Keyboard 4 button on the front of the device
Available Languages English and French

Electrical

Voltage 24VDC
Current Rating 160 mA
Wattage 2.5 W

Enclosures

Dimensions 96 x 96 x 72 mm L x H x D (3.78 x 3.78 x 2.83")
Mounting Panel Mounting
Electrical Connections 3.81 mm (0.15") removal terminal blocks

POWER SUPPLY UNIT (SPW)

Input Voltage 90/230VAC
Output Voltage 24VDC
Power Output 100 W
Dimensions 100 x 55 x 90 mm L x H x D (3.94 x 2.17 x 3.54")
Mounting DIN Rail

DEPORTED CASING – SILO (SDC-S)

Input Voltage 24 VDC
Output Voltage 5 VDC
Wattage 17 W
Measuring Range -2.4 to +2.4 mV/V
Input Sensitivity 0.002 mV
Microcontroller Microchip PIC32
Data Storage 2 MB
Dimensions 190 x 170 x 100 mm L x H x D (7.48 x 6.69 x 3.94")
Operating Temperature -10 to +50°C (14 to 122°F)
Storage Temperature -20 to +70°C (-4 to 158°F)
CAN Bus Up to 8 Deported Casing can be connected on the same bus

SILO KIT (SSK)

Junction Box Dimensions 80 x 80 x 52 mm L x H x D (3.15 x 3.15 x 2.05")
Junction Box Material Polystyrene
Studs Dimensions 25 x 25 x 12 mm L x H x D (0.98 x 0.98 x 0.47")
Studs Thread 3/8 inches
Studs Material Steel
Template Dimensions 178 x 25 x 15 mm L x H x D (7.01 x 0.98 x 0.59")
Template Material Steel

PT100 TEMPERATURE SENSOR (SPT)

Material Stainless steel
Connection ½" male cylindrical gas
Probe Length 200 mm (7.87")
Dimensions 300 x 100 x 70 mm L x H x D (11.81 x 3.94 x 2.76")
Probe 3-wire PT100 ceramic IEC 60751 class A
Operating Temperature -50 to +450°C (-58 to 842°F)
Storage Temperature -50 to +450°C (-58 to 842°F)

DEPORTED TEMPERATURE CASING (SDC-PT)

Output Voltage 24 VDC
Wattage 6.5 W
Measuring Range -50 to +150 °C (-58 to 302°F)
Microcontroller Microchip PIC32
Data Storage 2 MB
Dimensions 190 x 170 x 100 mm L x H x D (7.48 x 6.69 x 3.94")
Operating Temperature -10 to +50°C (14 to 122°F)
Storage Temperature -20 to +70°C (-4 to 158°F)

WEATHER SHIELD – 178 LOAD CELL (SWLC)

Dimensions 600 x 150 x 242 mm L x H x D (23.62 x 5.91 x 9.53")
Material Aluminum
Material Width 1 mm (0.04")
Mounting Collar clamping

ST1 Silo Weighing System

RELAY INTERFACE CASING (SOP-REL)

Max Relay Outputs Per Casing 16
Max Relay Output Voltage 24 VDC
Relay Current Rating 1 Amps
Max Switching Power 30 W
Life Expectancy 100,000 ops
Operating Temperature -10 to +50°C (14 to 122°F)
Storage Temperature -20 to +70°C (-4 to 158°F)
Input Voltage 24 VDC
Wattage 6 W
Microcontroller Microchip PIC32
Dimensions 160 x 90 x 58 mm L x H x D (6.30 x 3.54 x 2.28")
CAN Bus Up to 4 Interface Casing can be connected on the same bus

MODBUS TCP – INSERTED IN ST1 (SCOM-MOD)

Dimensions 82 x 60 x 15 mm L x H x D (3.23 x 2.36 x 0.59")
Microcontroller Microchip PIC16
Operating Temperature -10 to +50°C (14 to 122°F)
Storage Temperature -20 to +70°C (-4 to 158°F)
Output Voltage 5 VDC
Wattage 1.5 W
Max Simultaneous Connection 1
Max Number of Request 10 per seconds
Electrical Connection RJ-45
Connection Speed 10 to 100 mbps

RECOMMENDED LOAD CELLS

Model 178 Load Cell

Note: Please refer to model's datasheet for further information. Refer to Document no: 63999.

All specifications are subject to change without notice.

If you require any further information about any of the modules, please contact vpgt.marketing@vpgsensors.com.

ST1 Silo Weighing System

ORDERING INFORMATION FOR ST1

Complete item number

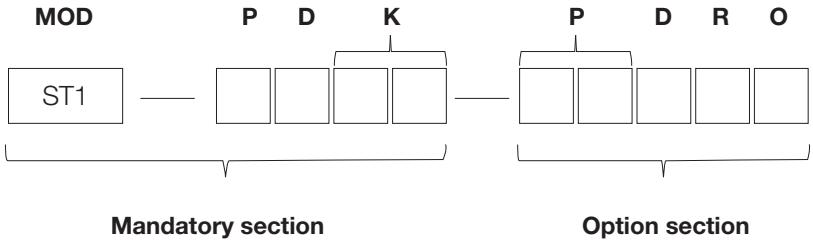

Mandatory section of item number

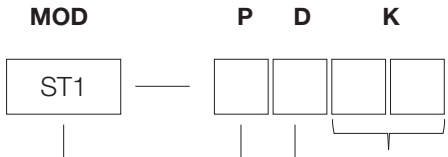

MODEL (MOD)
ST1

POWER (P)
1 = 90/230VAC to 24VDC 100W power supply

SILO KIT (K)
Enter a number between 01 and 08 to select the desired number of Silo Kits

DEPORTED CASING (D)
(up to a max of 6 silo kits per casing)
Enter a number between 1 and 8 to select the desired number of deported casings

Optional section of item number

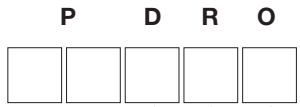

PT100 TEMPERATURE SENSOR (P)
Enter a number between 00 and 16 to select desired number of sensors

COMMUNICATION OUTPUT (O)
M = Modbus/TCP connection
N = No Modbus/TCP connection

DEPORTED TEMPERATURE CASING (D)
(up to six PT100 sensors per casing)
Enter a number between 0 and 8 to select desired number of casings

RELAY INTERFACE CASINGS (R)
(up to 16 relay outputs per casing)
Enter a number between 0 and 4 to select desired number of relay interface casings

Example Complete Item Selection Number:

ST1– 1104 – 0821M with 90/230 VAC to 24 VDC 100 W power supply, 1 deported casing, 4 silo kits, 8 temperature sensors, 2 deported temperature casings, 1 relay interface casings, and an Modbus TCP connection.

ST1 Silo Weighing System

COMPONENTS FOR INDIVIDUAL PURCHASE

RTSP	XXXX

RTSPST1	= MAIN CONTROL UNIT	RTSPSPT	= PT100 TEMP SENSOR
RTSPSPW	= POWER SUPPLY UNIT	RTSPSDCPT	= DEPORTED TEMP CASING FOR 6 PT100s
RTSPSDCS	= DEPORTED CASING FOR 6 SILO KITS	RTSPSOPREL	= OUTPUT - RELAY INTERFACE CASING
RTSPSSK	= SILO KIT	RTSPSCOMMOD	= COMMUNICATION – MODBUS/TCP
RTSPSLCC	= LOAD CELL AND SILO KITS CABLE	RTSPSNUC	= COMMUNICATION CABLE (CAN BUS)
RTSPSTCC	= TEMP SENSOR CABLE	RTSPSWLC	= LOAD CELL WEATHER SHIELD

Disclaimer

ALL PRODUCTS, PRODUCT SPECIFICATIONS AND DATA ARE SUBJECT TO CHANGE WITHOUT NOTICE.

Vishay Precision Group, Inc., its affiliates, agents, and employees, and all persons acting on its or their behalf (collectively, "VPG"), disclaim any and all liability for any errors, inaccuracies or incompleteness contained herein or in any other disclosure relating to any product.

The product specifications do not expand or otherwise modify VPG's terms and conditions of purchase, including but not limited to, the warranty expressed therein.

VPG makes no warranty, representation or guarantee other than as set forth in the terms and conditions of purchase. **To the maximum extent permitted by applicable law, VPG disclaims (i) any and all liability arising out of the application or use of any product, (ii) any and all liability, including without limitation special, consequential or incidental damages, and (iii) any and all implied warranties, including warranties of fitness for particular purpose, non-infringement and merchantability.**

Information provided in datasheets and/or specifications may vary from actual results in different applications and performance may vary over time. Statements regarding the suitability of products for certain types of applications are based on VPG's knowledge of typical requirements that are often placed on VPG products. It is the customer's responsibility to validate that a particular product with the properties described in the product specification is suitable for use in a particular application. You should ensure you have the current version of the relevant information by contacting VPG prior to performing installation or use of the product, such as on our website at vpgsensors.com.

No license, express, implied, or otherwise, to any intellectual property rights is granted by this document, or by any conduct of VPG.

The products shown herein are not designed for use in life-saving or life-sustaining applications unless otherwise expressly indicated. Customers using or selling VPG products not expressly indicated for use in such applications do so entirely at their own risk and agree to fully indemnify VPG for any damages arising or resulting from such use or sale. Please contact authorized VPG personnel to obtain written terms and conditions regarding products designed for such applications.

Product names and markings noted herein may be trademarks of their respective owners.